DESCRIPTION	APPROVED	DATE	REV.	CHANGE ORDER
NEW DOCUMENT	KEDEM S.	24/06/2004	A	

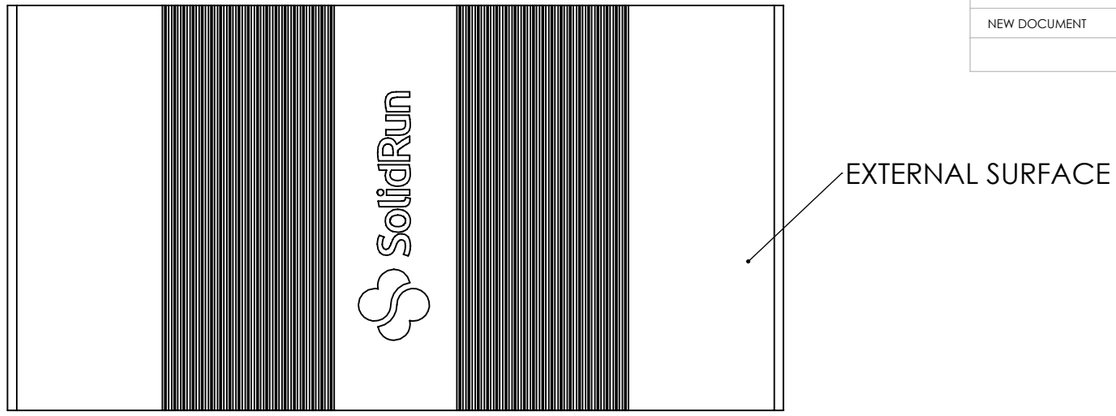

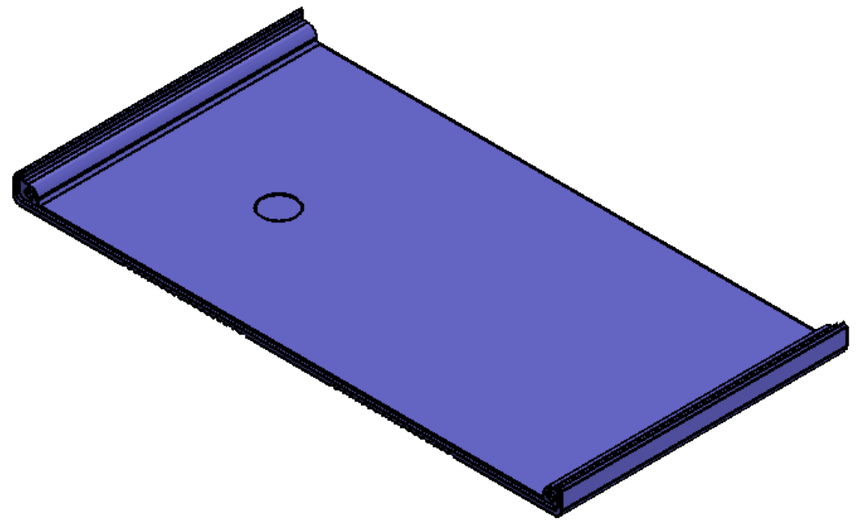

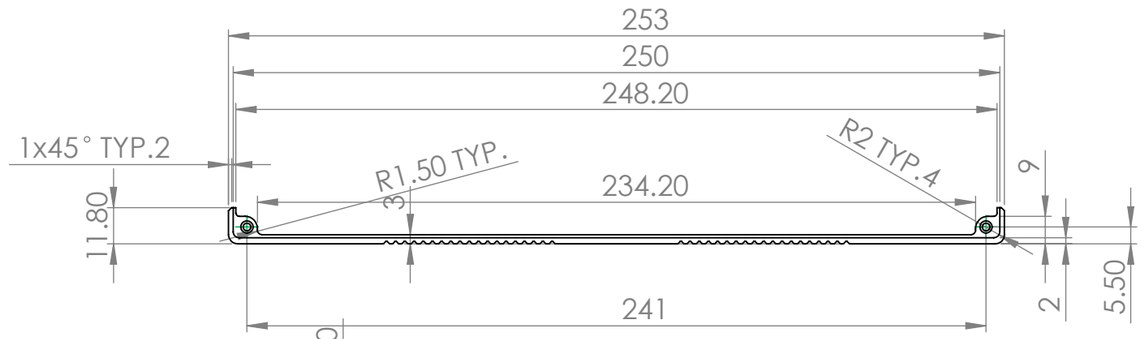

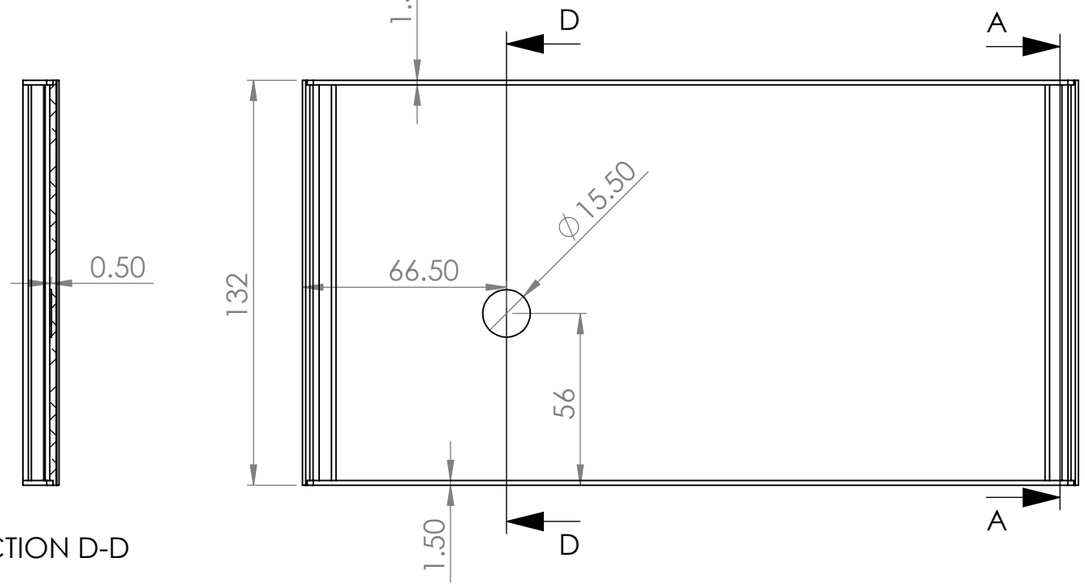

SECTION D-D

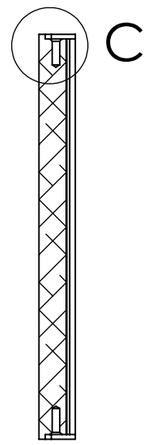

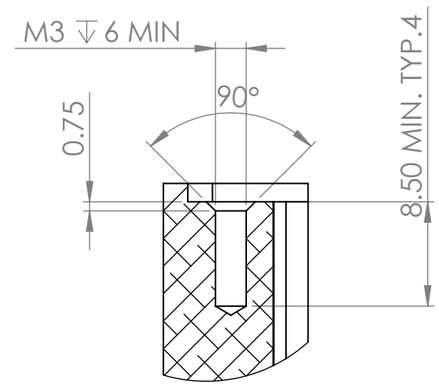

DETAIL C
SCALE 2 : 1

NOTES:
1. SAND BLAST / ETCH EXTERNAL SURFACE
2. BLACK ANODIZE

Mobile: 058-4624069
avil@korat-eng.com

	NAME	DATE	SCALE	SURFACE ROUGHNESS
DESIGNER	Avi Levy	14/01/2020	1:2	
DRAWING	Avi Levy	14/01/2020		
APPROVAL		14/01/2020		

TOL. NOT SPECIFIED ± IT12
ANGLES NOT SPECIFIED ±0.5°
REMOVE ALL SHARPE EDGES.
MATERIAL: AL 6061
FINISH: SEE NOTES

CUSTOMER: SOLIDRUN
PROJECT: GT-GTI+
NAME: MCH00163
DRAWING NO.: GTI-Plus Cover
REV.: B
DRAWING SIZE: A3

Proprierty of Korat Engineering
ALL DIMENSIONS ARE IN MILIMETERS
SHEET 1 OF 3

FILE LOCATIN:C:\Users\User\Dropbox\SolidRun 3D Models\GT-GTI\Park Assist\GTI-Plus Cover

DESCRIPTION	APPROVED	DATE	REV.	CHANGE ORDER
NEW DOCUMENT	KEDEM S.	24/06/2004	A	

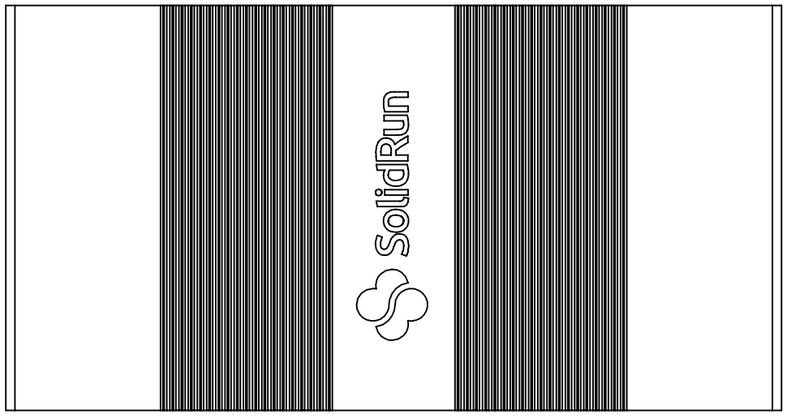

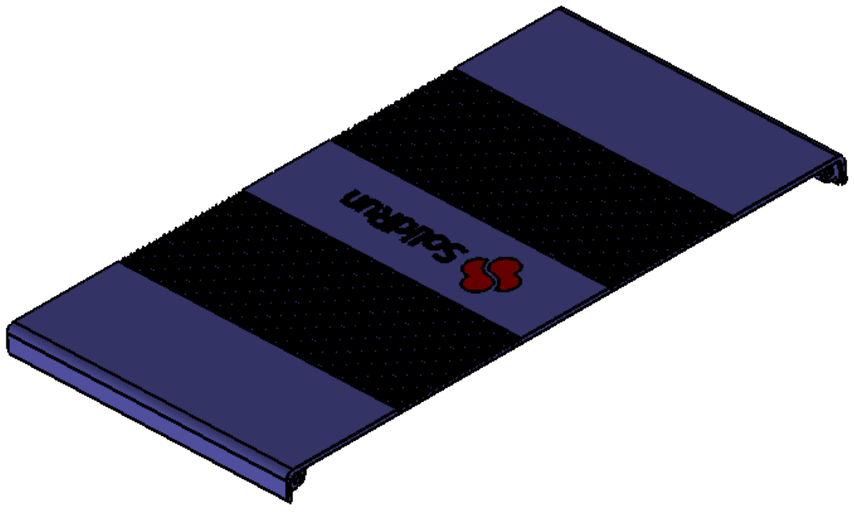

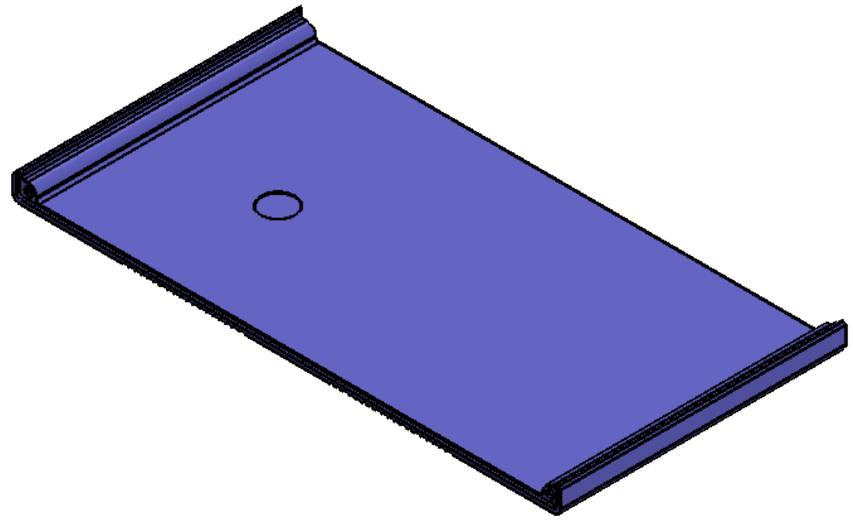

NOTE:
1. SILK PRINT ACCORDING TO THE DXF
2. SYMBOL COLOR - RED
3. TEXT COLOR - WHITE

Mobile: 058-4624069
avil@korat-eng.com

	NAME	DATE	SCALE	SURFACE ROUGHNESS
DESIGNER	Avi Levy	14/01/2020	1:2	
DRAWING	Avi Levy	14/01/2020		
APPROVAL		14/01/2020		

TOL. NOT SPECIFIED ± IT12
ANGLES NOT SPECIFIED ±0.5°
REMOVE ALL SHARPE EDGES.
MATERIAL: AL 6061
FINISH: SEE NOTES

CUSTOMER: SOLIDRUN
PROJECT: GT-GTI+
NAME: MCH00163
DRAWING NO.: GTI-Plus Cover
REV.: A
DRAWING SIZE: A3

Proprierty of Korat Engineering
ALL DIMENSIONS ARE IN MILIMETERS
SHEET 2 OF 3

FILE LOCATIN:C:\Users\User\Dropbox\SolidRun 3D Models\GT-GTI\Park Assist\GTI-Plus Cover

FILE LOCATIN:C:\Users\User\Dropbox\SolidRun 3D Models\GT-GTI\Park Assist\GTI-Plus Cover